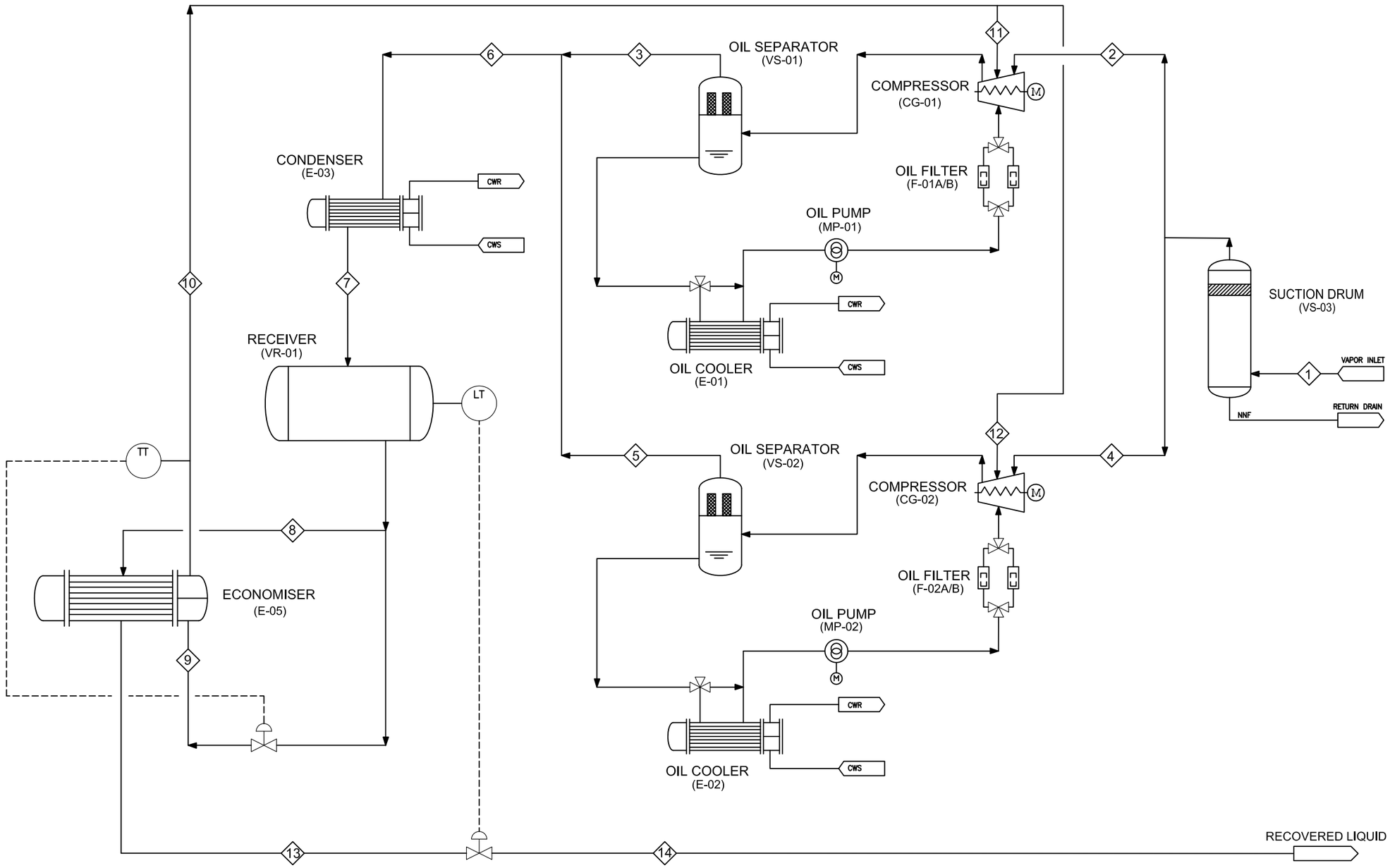

Conclusion meeting:

1) stream lines 9 & 10 shall be checked and calculated again to consider correct temperature and pressure for final revision.

		1	2	3	4	5	6	7	8	9	10	11	12	13	14
TEMP.	°C	-36.50	-36.50	71.90	-36.50	71.90	71.90	41.00	41.00	-5.40	-5.50	-5.50	-5.50	-0.10	-36.50
PRESS.	barA	0.87	0.87	16.40	0.87	16.40	16.40	15.90	15.90	3.49	3.47	3.47	3.47	15.66	0.87
MASS FLOW	kg/h	1306	653	773	653	773	1546	1546	1306	239	239	120	120	1306	1306
DENSITY	kg/m3	0.76	0.76	10.7	0.76	10.7	10.7	574.9	574.9	15.8	2.8	2.8	2.8	632.9	6.5
V.F.	-	1.00	1.00	1.00	1.00	1.00	1.00	0.00	0.00	0.18	1.00	1.00	1.00	0.00	0.12

NOTES

- PRESSURE CONTROLLER OUTPUT SIGNAL WILL BE SENT TO REFRIGERATION PACKAGE BY CLIENT TO CONTROL COMPRESSOR LOADING AS TO MAINTAIN PRESSURE OF AMMONIA STORAGE TANK CONSTANT.

LEGEND

REFERENCE DRAWINGS	DWG. No.
--	--

VENDOR:

VENDOR DOC. NO.:

Rev.	Date	Class	Purpose of Issue	Prepared by	Checked by	Approved by
00		IFA	ISSUED FOR APPROVAL	A.K.	M.O.	A.M.
00		IFA	ISSUED FOR APPROVAL	A.K.	M.O.	A.M.

OWNER:

PROJECT: **ZANJAN UREA FERTILIZER PROJECT**

CONTRACTOR:

DRAWING TITLE:

PROCESS FLOW DIAGRAM

XXXXXXX

Rev.	Size.	Scale.	Sheet No.
01	A3	NTS	1 OF 1