Airpack B.V. - Air Compressor –

Integrated Methanol and Ammonia Plant

17735-COM Instrument Hook-up Drawing (K020)

02	14-02-2024	Issued for Approval	A.Z.	S.K.	J.J.
01	07-12-2023	Issued for Approval	A.Z.	S.K.	J.J.
REV.	**DATE**	**DESCRIPTION**	**DRAWN**	**CHECKED**	**APPROVED**

This document has been produced by Contractor for LIDCO. It is confidential and cannot be disclosed to or used by any third party for any purpose without prior written consent.

LIST OF REVISED PAGES

Page \ Rev.	01	02	03	04	05	Page \ Rev.	01	02	03	04	05	Page \ Rev.	01	02	03	04	05	Page \ Rev.	01	02	03	04	05
1	X	X				**26**						**51**						**76**					
2	X	X				**27**						**52**						**77**					
3	X	X				**28**						**53**						**78**					
4	X	X				**29**						**54**						**79**					
5	X	X				**30**						**55**						**80**					
6	X	X				**31**						**56**						**81**					
7	X	X				**32**						**57**						**82**					
8	X	X				**33**						**58**						**83**					
9	X	X				**34**						**59**						**84**					
10						**35**						**60**						**85**					
11						**36**						**61**						**86**					
12						**37**						**62**						**87**					
13						**38**						**63**						**88**					
14						**39**						**64**						**89**					
15						**40**						**65**						**90**					
16						**41**						**66**						**91**					
17						**42**						**67**						**92**					
18						**43**						**68**						**ATTACHMENT**					
19						**44**						**69**						**1**					
20						**45**						**70**						**2**					
21						**46**						**71**						**3**					
22						**47**						**72**						**4**					
23						**48**						**73**						**5**					
24						**49**						**74**						**6**					
25						**50**						**75**						**7**					

This document has been produced by Contractor for LIDCO It is confidential and cannot be disclosed to or used by any third party for any purpose without prior written consent.

PRESSURE GAUGE

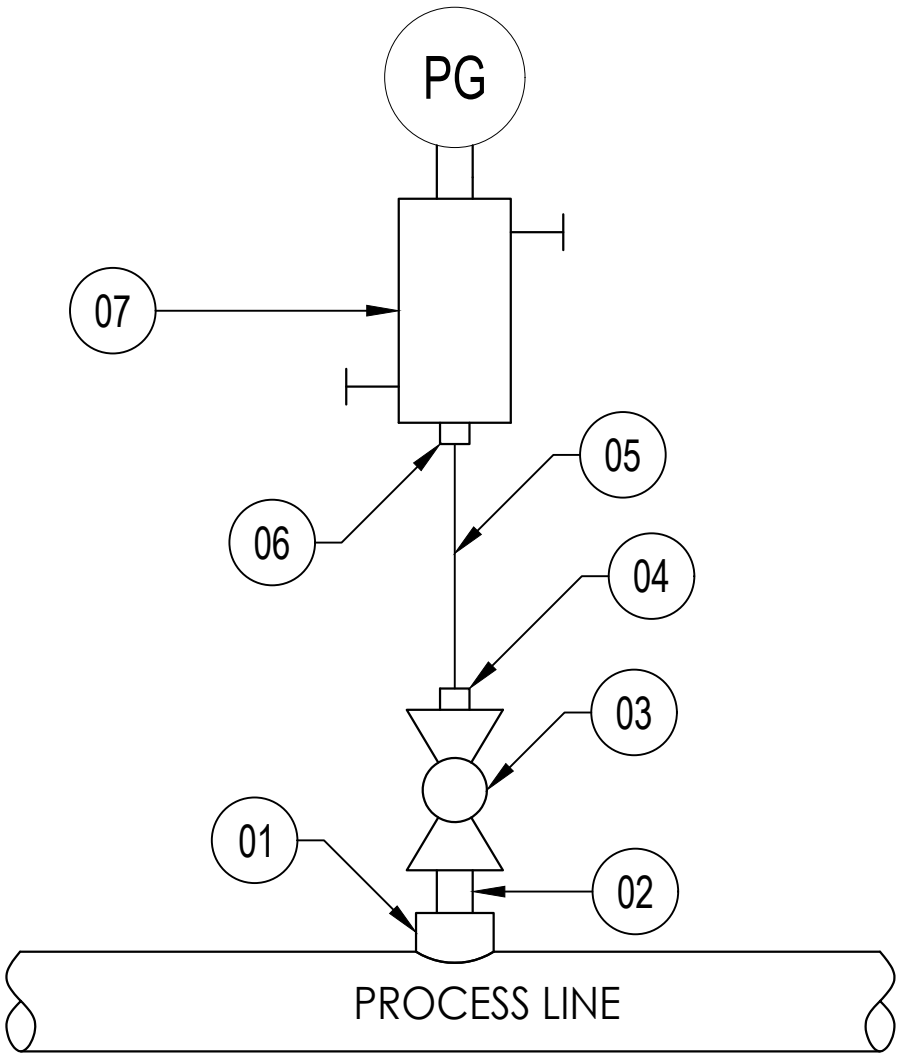

ITEM	QTY	DESCRIPTION	SIZE	MATERIAL
01	01	PROCESS CONNECTION	3/4" NPT	SS316
02	01	HEX NIPPLE	3/4" NPT	SS316
03	01	BALL VALVE	3/4" NPT-F	SS316
04	01	CONNECTOR DOUBLE COMPRESSION TYPE	3/4"NPT-M-12mmOD	SS316
05	-	TUBING	12mmOD	SS316
06	01	CONNECTOR DOUBLE COMPRESSION TYPE	1/2"NPT-M-12mmOD	SS316
07	01	2-WAY BLOCK & BLEED MANIFOLD	1/2" NPT-F x 1/2" NPT-F	SS316
08				
09				

TAGNUMBERS:

320PG-8201, 320PG-8202, 320PG-8203, 320PG-8204

REFERENCE DOCUMENTS:

N-278-VD-6019-PR-PID-0002-01 P&ID
N-278-VD-6019-IN-DS-0013-01 INSTRUMENT DATA SHEETS

SUBJECT	HOOKUP PRESSURE GAUGE	DATE	07-12-2023
		DRAWN BY	AZ
		CHECKED BY	SK
CLIENT	LAVAN INDUSTRY	PLANT LOCATION	IRAN ONSHORE
CLIENT REF	Integrated Methanol and Ammonia Plant	DRAWING NO.	17735-38
AIRPACK REF	17735-COM	SHEETNO.	1

THIS DRAWING IS OWNED BY AIRPACK AND SHALL NOT BE PRINTED OR COPIED IN ANY OTHER WAY THAN WITH AIRPACKS PERMISSION

02	13-02-2024	AZ
01	07-12-2023	AZ

TEMPERATURE GAUGE
LOCALLY MOUNTED

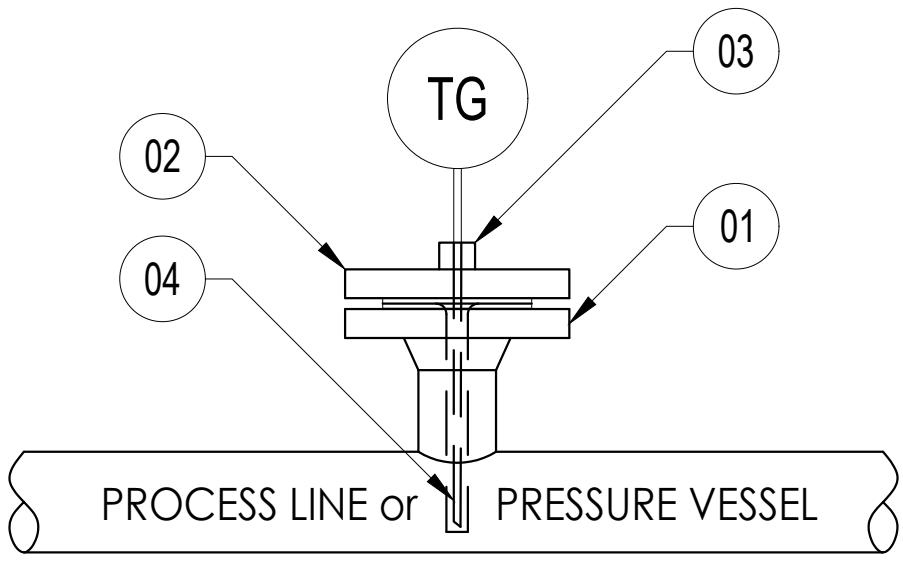

ITEM	QTY	DESCRIPTION	SIZE	MATERIAL
01	01	PROCESS CONNECTION	1 1/2" ANSI 300# RF	SS316
02	01	THERMOWELL	1 1/2" ANSI 300# RF	SS316
03	01	CONNECTOR DOUBLE COMPRESSION FITTING	3/4"NPT-M - 6mm OD	SS316
04	01	TEMPERATURE ELEMENT	N.A.	SS316
05				
06				
07				
08				
09				

TAGNUMBERS:

320TG-8206, 320TG-8209, 320TG-8210, 320TG-8211

REFERENCE DOCUMENTS:

N-278-VD-6019-PR-PID-0002-01 P&ID
N-278-VD-6019-IN-DS-0013-01 INSTRUMENT DATA SHEETS

SUBJECT	HOOKUP TEMPERATURE GAUGE	DATE	07-12-2023
		DRAWN BY	AZ
		CHECKED BY	SK
CLIENT	LAVAN INDUSTRY	PLANT LOCATION	IRAN ONSHORE
CLIENT REF	Integrated Methanol and Ammonia Plant	DRAWING NO.	17735-38
AIRPACK REF	17735-COM	SHEETNO.	2

THIS DRAWING IS OWNED BY AIRPACK AND SHALL NOT BE PRINTED OR COPIED IN ANY OTHER WAY THAN WITH AIRPACKS PERMISSION

02	13-02-2024	AZ
01	07-12-2023	AZ

TEMPERATURE GAUGE
LOCALLY MOUNTED

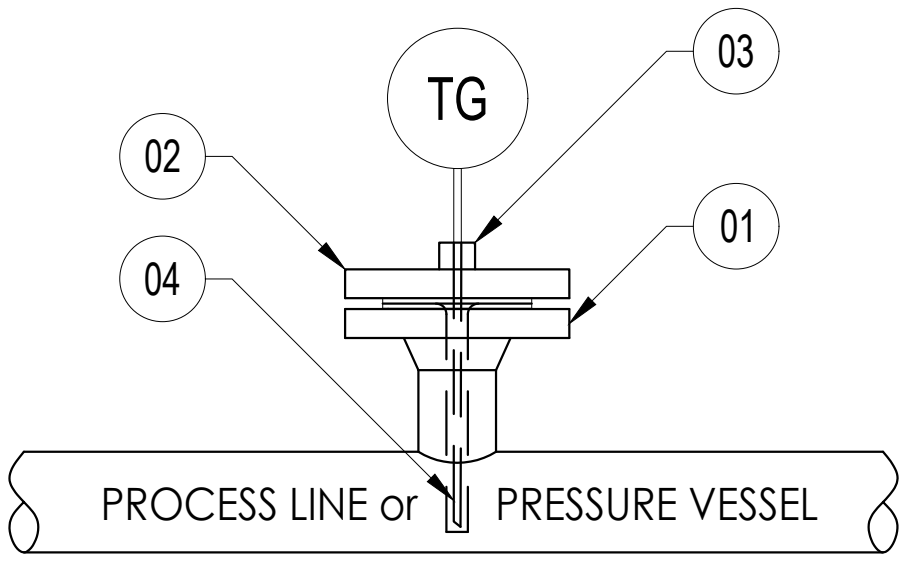

ITEM	QTY	DESCRIPTION	SIZE	MATERIAL
01	01	PROCESS CONNECTION	1 1/2" ANSI 600# RF	SS316
02	01	THERMOWELL	1 1/2" ANSI 600# RF	SS316
03	01	CONNECTOR DOUBLE COMPRESSION FITTING	3/4"NPT-M - 6mm OD	SS316
04	01	TEMPERATURE ELEMENT	N.A.	SS316
05				
06				
07				
08				
09				

TAGNUMBERS:

320TG-8207, 320TG-8208

REFERENCE DOCUMENTS:

N-278-VD-6019-PR-PID-0002-01 P&ID
N-278-VD-6019-IN-DS-0013-01 INSTRUMENT DATA SHEETS

SUBJECT	HOOKUP TEMPERATURE GAUGE	DATE	07-12-2023
		DRAWN BY	AZ
		CHECKED BY	SK
CLIENT	LAVAN INDUSTRY	PLANT LOCATION	IRAN ONSHORE
CLIENT REF	Integrated Methanol and Ammonia Plant	DRAWING NO.	17735-38
AIRPACK REF	17735-COM	SHEETNO.	3

THIS DRAWING IS OWNED BY AIRPACK AND SHALL NOT BE PRINTED OR COPIED IN ANY OTHER WAY THAN WITH AIRPACKS PERMISSION

02	13-02-2024	AZ
01	07-12-2023	AZ

PRESSURE TRANSMITTER

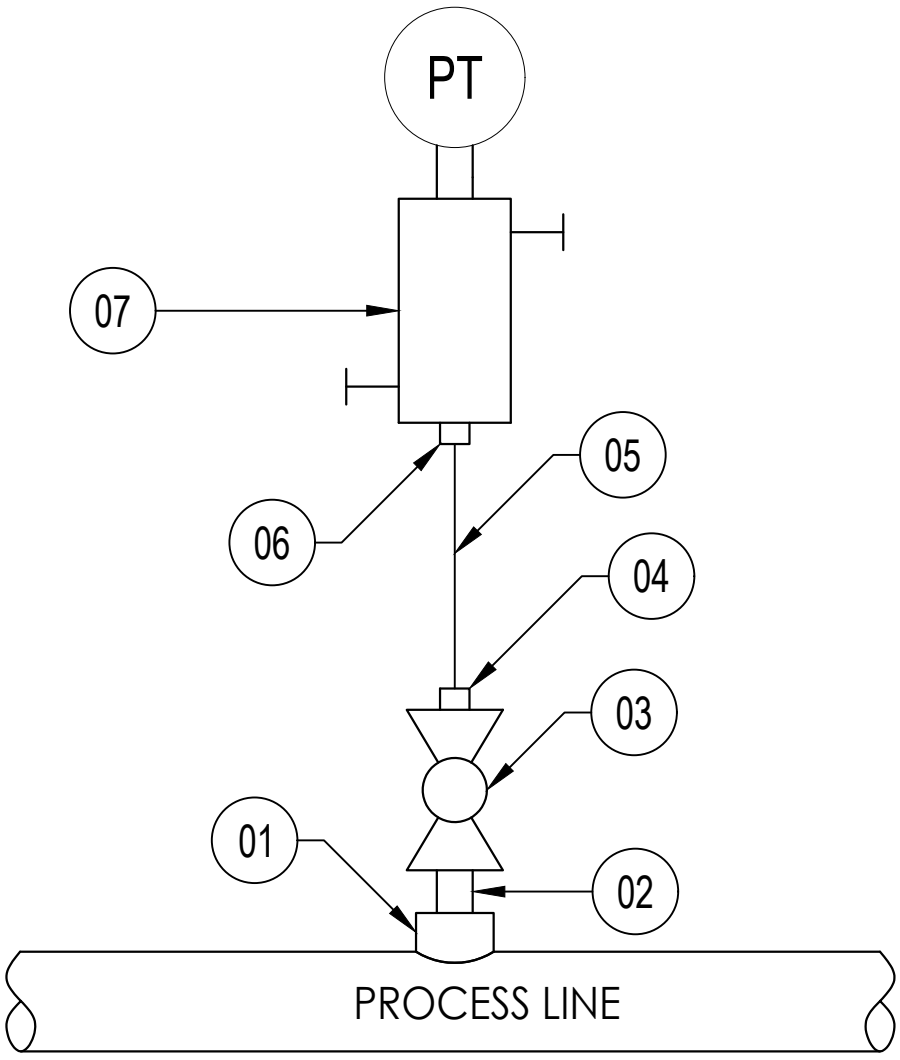

ITEM	QTY	DESCRIPTION	SIZE	MATERIAL
01	01	PROCESS CONNECTION	3/4" NPT	SS316
02	01	HEX NIPPLE	3/4" NPT	SS316
03	01	BALL VALVE	3/4" NPT-F	SS316
04	01	CONNECTOR DOUBLE COMPRESSION TYPE	3/4"NPT-M-12mmOD	SS316
05	-	TUBING	12mmOD	SS316
06	01	CONNECTOR DOUBLE COMPRESSION TYPE	1/2"NPT-M-12mmOD	SS316
07	01	2-WAY BLOCK & BLEED MANIFOLD	1/2" NPT-F x 1/2" NPT-F	SS316
08				
09				

TAGNUMBERS:

320PT-8201, 320PT-8202, 320PT-8203, 320PT-8204

REFERENCE DOCUMENTS:

N-278-VD-6019-PR-PID-0002-01 P&ID
N-278-VD-6019-IN-DS-0013-01 INSTRUMENT DATA SHEETS

SUBJECT	HOOKUP PRESSURE TRANSMITTER	DATE	07-12-2023
		DRAWN BY	AZ
		CHECKED BY	SK
CLIENT	LAVAN INDUSTRY	PLANT LOCATION	IRAN ONSHORE
CLIENT REF	Integrated Methanol and Ammonia Plant	DRAWING NO.	17735-38
AIRPACK REF	17735-COM	SHEETNO.	4

THIS DRAWING IS OWNED BY AIRPACK AND SHALL NOT BE PRINTED OR COPIED IN ANY OTHER WAY THAN WITH AIRPACKS PERMISSION

02	13-02-2024	AZ
01	07-12-2023	AZ

TEMPERATURE TRANSMITTER
REMOTE MOUNTED

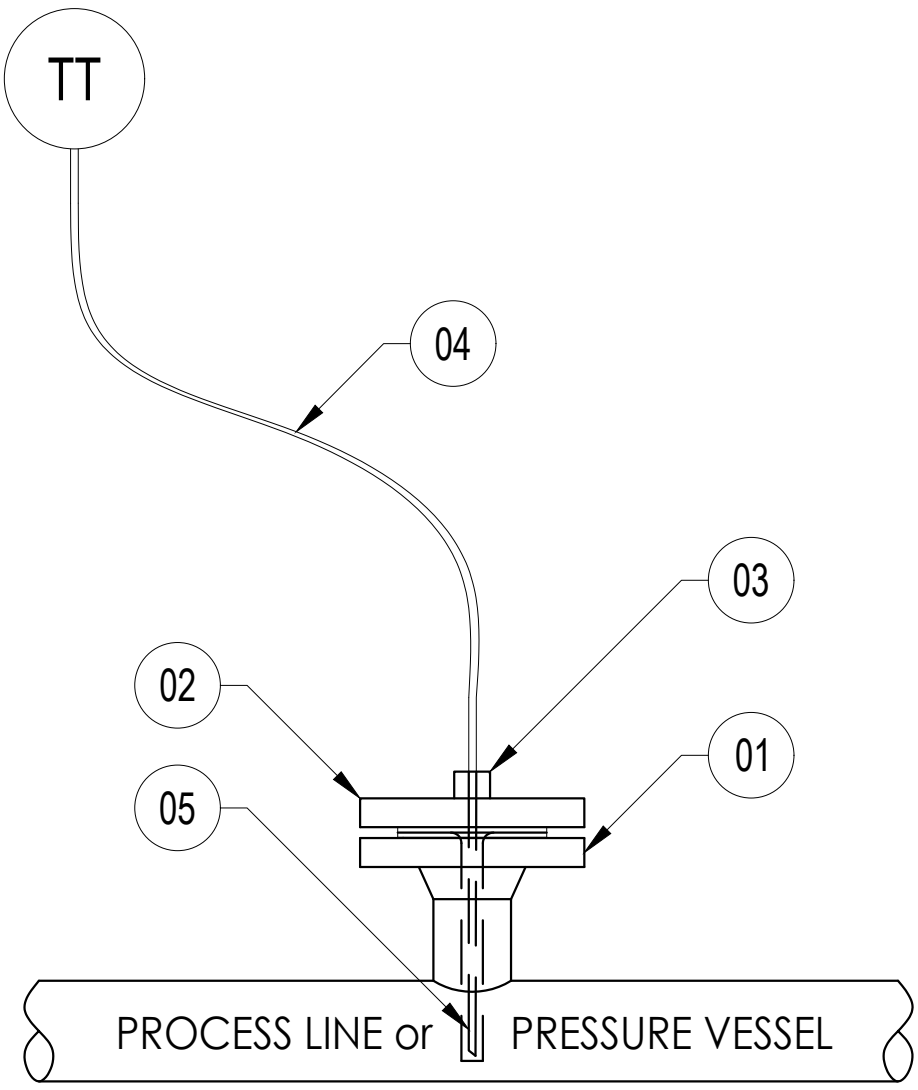

ITEM	QTY	DESCRIPTION	SIZE	MATERIAL
01	01	PROCESS CONNECTION	1 1/2" ANSI 300# RF	SS316
02	01	THERMOWELL	1 1/2" ANSI 300# RF	SS316
03	01	CONNECTOR DOUBLE COMPRESSION FITTING	3/4"NPT-M - 6mm OD	SS316
04	01	CAPILLARY, MOULDED TO TEMPERATURE ELEMENT	L=5m	SS316
05	01	TEMPERATURE ELEMENT	N.A.	SS316
06				
07				
08				
09				

TAGNUMBERS:

320TT-8201, 320TT-8205

REFERENCE DOCUMENTS:

N-278-VD-6019-PR-PID-0002-01 P&ID
N-278-VD-6019-IN-DS-0013-01 INSTRUMENT DATA SHEETS

SUBJECT	HOOKUP TEMPERATURE TRANSMITTER	DATE	07-12-2023
		DRAWN BY	AZ
		CHECKED BY	SK
CLIENT	LAVAN INDUSTRY	PLANT LOCATION	IRAN ONSHORE
CLIENT REF	Integrated Methanol and Ammonia Plant	DRAWING NO.	17735-38
AIRPACK REF	17735-COM	SHEETNO.	5

THIS DRAWING IS OWNED BY AIRPACK AND SHALL NOT BE PRINTED OR COPIED IN ANY OTHER WAY THAN WITH AIRPACKS PERMISSION

02	13-02-2024	AZ
01	07-12-2023	AZ

TEMPERATURE TRANSMITTER
REMOTE MOUNTED

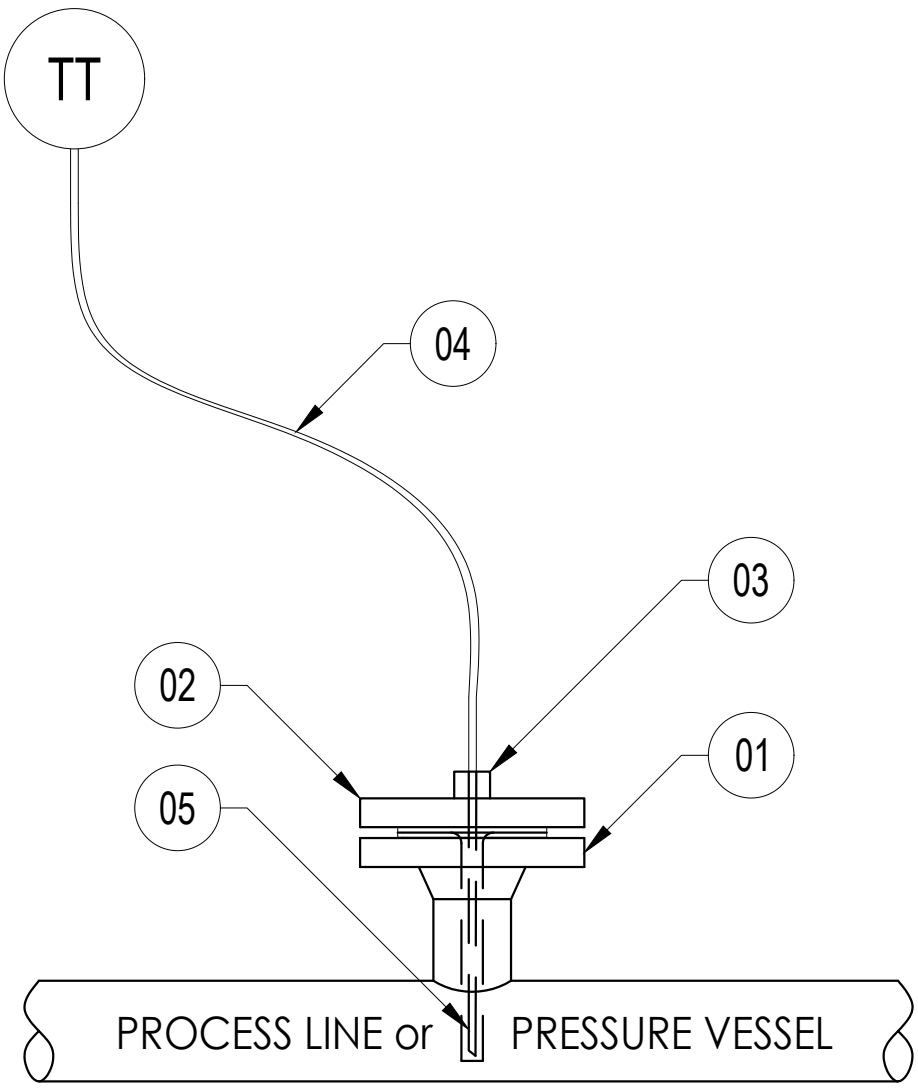

ITEM	QTY	DESCRIPTION	SIZE	MATERIAL
01	01	PROCESS CONNECTION	1 1/2" ANSI 600# RF	SS316
02	01	THERMOWELL	1 1/2" ANSI 600# RF	SS316
03	01	CONNECTOR DOUBLE COMPRESSION FITTING	3/4"NPT-M - 6mm OD	SS316
04	01	CAPILLARY, MOULDED TO TEMPERATURE ELEMENT	L=5m	SS316
05	01	TEMPERATURE ELEMENT	N.A.	SS316
06				
07				
08				
09				

TAGNUMBERS:

320TT-8202, 320TT-8203, 320TT-8204

REFERENCE DOCUMENTS:

N-278-VD-6019-PR-PID-0002-01 P&ID
N-278-VD-6019-IN-DS-0013-01 INSTRUMENT DATA SHEETS

SUBJECT	HOOKUP TEMPERATURE TRANSMITTER	DATE	07-12-2023
		DRAWN BY	AZ
		CHECKED BY	SK
CLIENT	LAVAN INDUSTRY	PLANT LOCATION	IRAN ONSHORE
CLIENT REF	Integrated Methanol and Ammonia Plant	DRAWING NO.	17735-38
AIRPACK REF	17735-COM	SHEETNO.	6

THIS DRAWING IS OWNED BY AIRPACK AND SHALL NOT BE PRINTED OR COPIED IN ANY OTHER WAY THAN WITH AIRPACKS PERMISSION

02	13-02-2024	AZ
01	07-12-2023	AZ

PRESSURE BYPASS (RECYCLE) VALVE

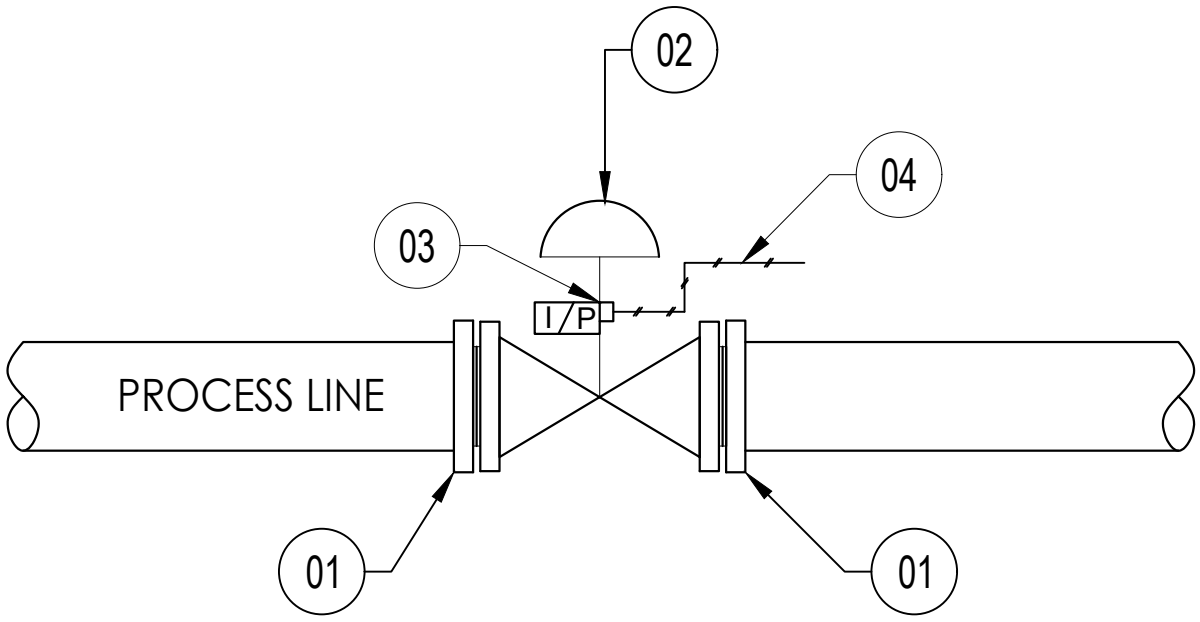

ITEM	QTY	DESCRIPTION	SIZE	MATERIAL
01	02	PROCESS CONNECTION	3/4" ANSI 300# RF	SS316
02	01	PRESSURE CONTROL VALVE	3/4"ANSI 300# RF	SS316
03	01	CONNECTOR DOUBLE COMPRESSION TYPE	1/4"NPT-M- 12mmOD	SS316
04	-	TUBING	12mmOD	SS316
05				
06				
07				
08				
09				

TAGNUMBERS:

320PCV-8201

REFERENCE DOCUMENTS:

N-278-VD-6019-PR-PID-0002-01 P&ID
N-278-VD-6019-IN-DS-0041-01 CONTROL VALVE DATA SHEETS

SUBJECT	HOOKUP PRESSURE BYPASS (RECYCLE) VALVE	DATE	07-12-2023
		DRAWN BY	AZ
		CHECKED BY	SK
CLIENT	LAVAN INDUSTRY	PLANT LOCATION	IRAN ONSHORE
CLIENT REF	Integrated Methanol and Ammonia Plant	DRAWING NO.	17735-38
AIRPACK REF	17735-COM	SHEETNO.	7

THIS DRAWING IS OWNED BY AIRPACK AND SHALL NOT BE PRINTED OR COPIED IN ANY OTHER WAY THAN WITH AIRPACKS PERMISSION

02	13-02-2024	AZ
01	07-12-2023	AZ